EVOLUTION AQUA
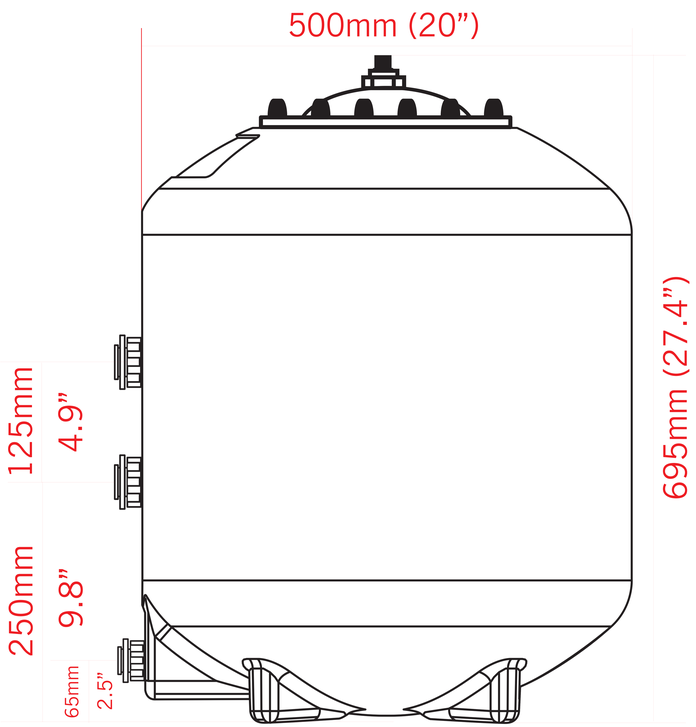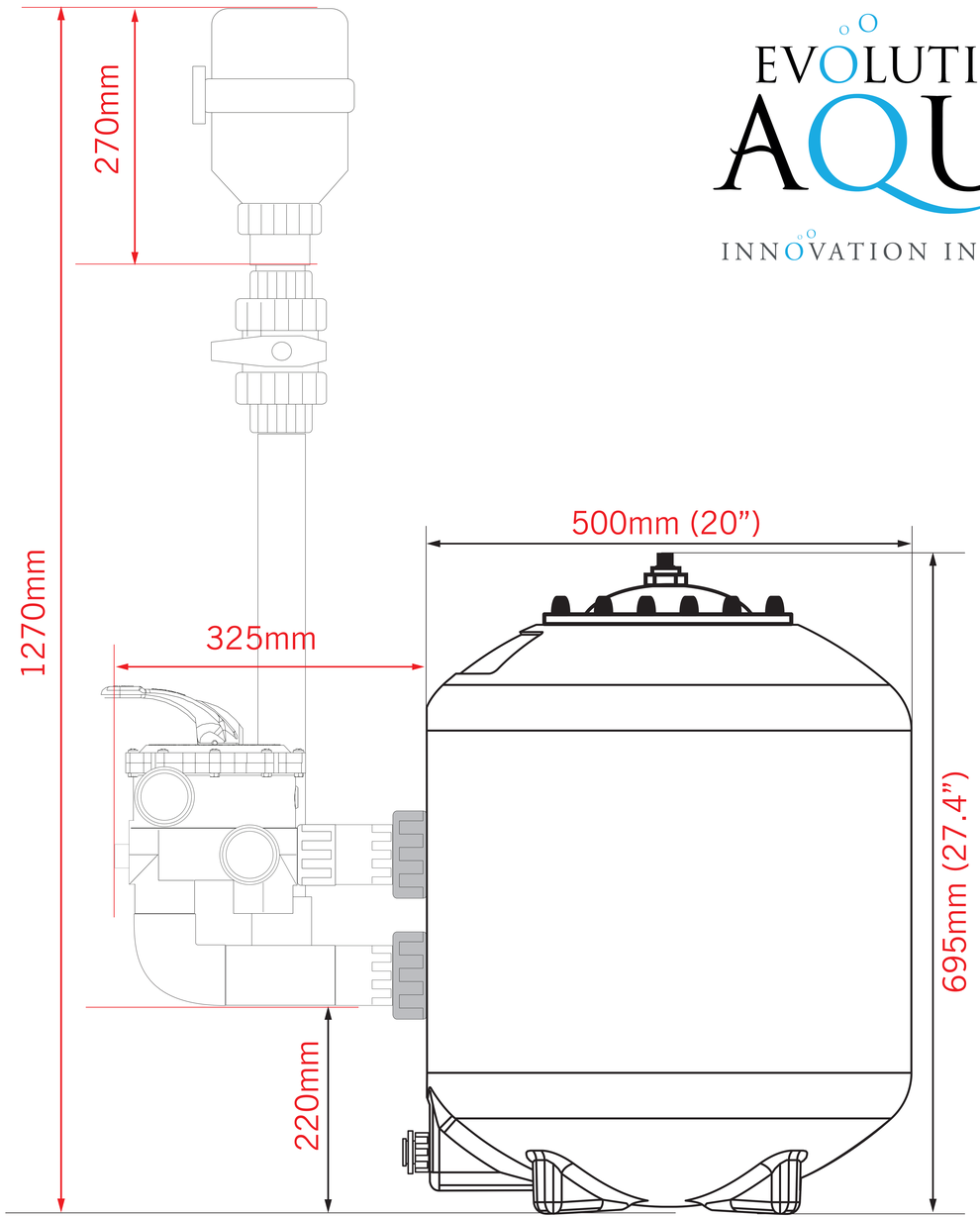
INNOVATION IN WATER